THE BELL SYSTEM TECHNICAL JOURNAL
Vol. 62, No. 10, December 1983
Printed in U.S.A.

The AR6A Single-Sideband Microwave Radio System:

System Networks

By R. L. ADAMS,* J. L. DONOGHUE,* A. N. GEORGIADES,*
R. E. SHEEHEY,* J. R. SUNDQUIST,* and C. F. WALKER*

(Manuscript received February 14, 1983)

The paper describes some of the key networks needed for the AR6A System for the predistorter, Intermediate Frequency (IF) filtering, and terminal multiplex. The design of a paasive broadband adjustable phase splitter for the predistorter is described. Network designs using inductors, capacitors, and, in some cases, crystals for IF filtering, equalization, and multimastergroup connection are also described.

I. INTRODUCTION

A large number of filters and equalizers, and an adjustahle phase splitter are needed in AR6A for pilot insertion and removal, hand limiting, amplitude correction, and predistortion circuitry in repeaters and in multiplex equipment. Technology developed for TD and TH radio[1,2] and L4 and L5 coaxial-carrier transmission systems[3–5] was enhanced to meet the specific and demanding needs of the AR6A† System filters and equalizers; however, a special approach was required for the design of an adjustable phase resolver (phase splitter) for the predistorter. The phase resolver is an adjustable Inductor Capacitor (LC)‡ network that allows matching the phase of the predistortion

* Bell Laboratories.

† Amplitude Modulation Radio at 6 GHz for the initial (A) version of the system.

‡ Acronyms and ahhreviations used in the text and figures of this paper are defined at the hack of the *Journal.*

signal to the opposite of the phase of the distortion component of the main signal. The filters provide wider handwidths and higher discrimination than their FM radio counterparts, and amplitude equalization, rather than delay equalization, is required. Extensive use was made of computer aids for design and analysis. A high-speed, precision interactive mini Computer-Operated Transmission Measurement Set (COTMS) proved necessary for laboratory development of networks. More than 700 models of about 140 network designs were needed for development and final design of the AR6A System.

The theory and design of the phase resolver for the AR6A predistorter is described in some detail. Descriptions of the Intermediate Frequency (IF) filter and equalizer, the upper and lower IF handpass filters, and the multimastergroup connector filters follow.

II. PHASE RESOLVER

2.1 Function

The phase resolver is a passive three-port network used in the AR6A predistorter.[6] It splits the predistorter input signal into two equal-amplitude signals that have a constant phase difference in the IF hand between 59 and 89 MHz. The phase difference is manually adjustable. This provides adjustment of the phase predistortion component to cancel the distortion products generated in the traveling-wave tube.

2.2 Theory

The phase-resolver network consists of a quadrature hyhrid network, two attenuators, and a combining hyhrid transformer connected as shown in Fig. 1. The outputs can he shown to he

$$E_B = 0.5\ E_A(G_1 + jG_2),$$
$$E_C = 0.5\ E_A(-G_1 + jG_2). \tag{1}$$

Thus, the magnitude of either output is

$$|E_{B,C}| = 0.5\ |E_A|\ \sqrt{G_1^2 + G_2^2}, \tag{2}$$

and the phase difference is

$$\Theta_B - \Theta_C = 2\ \tan^{-1}(G_2/G_1). \tag{3}$$

A key element of this network is the hroadhand quadrature hyhrid network.

To achieve a widehand quadrature hyhrid network, a Cauer configuration[7] was chosen. This is a four-port network consisting of two hyhrid transformers connected to two lossless LC networks, N and N', as shown in Fig. 2. With port A driven, ports B and C will have quadrature phase, and port D will be isolated if N and N' are

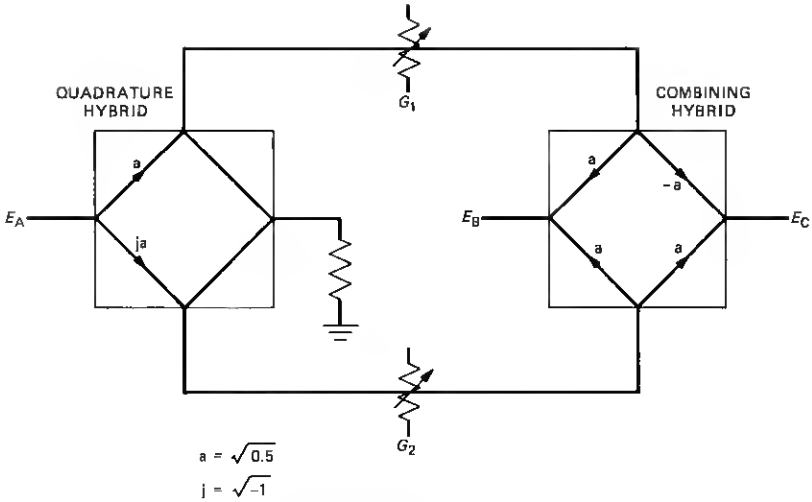

Fig. 1—Phase-resolver block diagram.

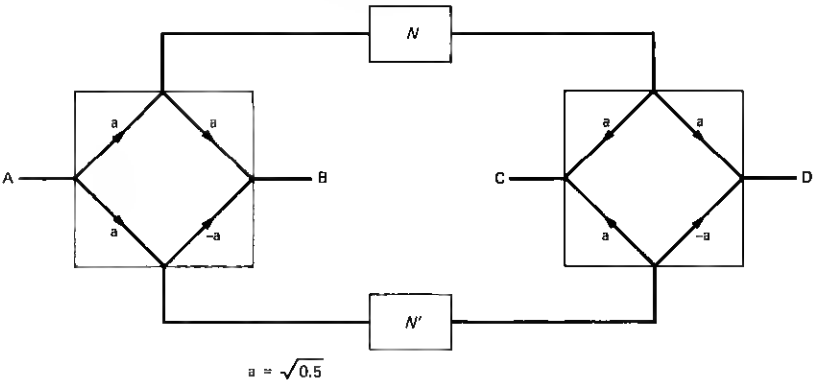

Fig. 2—Cauer network.

dual symmetric networks. This can be determined if the scattering parameters for the complete network are derived in terms of the scattering parameters of N and N'.

$$s_{AA} = (s_{11} + s'_{11})/2$$

$$s_{BA} = (s_{11} - s'_{11})/2$$

$$s_{CA} = (s_{21} + s'_{21})/2$$

$$s_{DA} = (s_{21} - s'_{21})/2. \tag{4}$$

If N and N' are dual networks, then

$$s_{11} = -s'_{11}, \tag{5}$$

and

$$s_{21} = s'_{21}.$$

Then,

$$s_{AA} = 0,$$

$$s_{BA} = s_{11},$$

$$s_{CA} = s_{21},$$

$$s_{DA} = 0. \tag{6}$$

The other twelve scattering parameters for tbe four-port network bave a corresponding form. These relations describe a hybrid network with port A isolated from port D, and port B isolated from port C. It is a quadrature network if N and N' are not only dual but also symmetric lossless LC networks. This can be shown as follows.

It is convenient to define a split ratio, Γ, as

$$\Gamma = \frac{s_{BA}}{s_{CA}} = \frac{s_{11}}{s_{21}}. \tag{7}$$

For a quadrature network, Γ must have the following form:

$$\Gamma(s) = s\,\frac{P_{11}(s^2)}{P_{21}(s^2)} \quad \text{or} \quad \frac{P_{11}(s^2)}{sP_{21}(s^2)}. \tag{8}$$

Here, P_{11} and P_{21} are polynomials. With $s = j\omega$, phase quadrature can be observed. To avoid right-half plane transmission zeros requiring right-half plane zeros, Γ is restricted to the following form:

$$\Gamma(s) = \frac{P_n(s^2)}{s^{2m+1}}. \tag{9}$$

Here, P_n is an nth-order polynomial and m is an integer. Then the networks, N and N', are simple ladder networks.

The design of a quadrature Cauer network consists of first finding a suitable polynomial, $P_n(-\omega^2)$, such tbat $|\Gamma|$ approximates unity over the frequency band of interest. A corresponding symmetric ladder network and its dual are then synthesized to realize N and N'. The synthesis procedure can be simplified by taking advantage of the fact that the networks are symmetric.

2.3 Realization

Extensive use was made of computer aids and computer-operated transmission measuring sets during the design and development. The hybrid transformers were characterized on COTMS.[8] With this characterization used in a circuit analysis program, an optimization routine

could be used to modify N and N' to compensate for parasitics. For model characterization and laboratory correction of parasitics, a high-accuracy, high-speed computer-operated transmission measurement set proved necessary. This set, "Mini COTMS," has a measurement speed fast enough for computer-corrected simultaneous real-time display of loss, phase or delay, and input and output return loss.

Figure 3 is a photograph of the phase resolver.

III. IF FILTER/EQUALIZER

3.1 Function

This circuit provides the 74.13-MHz center frequency IF filtering and amplitude equalization. Figure 4 shows that four networks are used. The bandpass filter limits adjacent channel interference and image interference in the Multimastergroup Translator for Radio (MMGT-R). One basic equalizer and two mop-up equalizers provide static amplitude equalization. The basic equalizer corrects for systematic amplitude variations in the overall Transmitter-Receiver (TR) bay transmission characteristic. Two mop-up equalizers correct for unit-to-unit amplitude deviations.

3.2 Design

Design was facilitated by two interactive computer programs. One does the rational function approximation and insertion loss synthesis; the other performs Norton transformations to optimize filter topology and element values. A general-purpose linear network analysis program allowed simulation of parasitic effects in any of the designs.

An 11th-order filter was synthesized to meet the objectives. Two

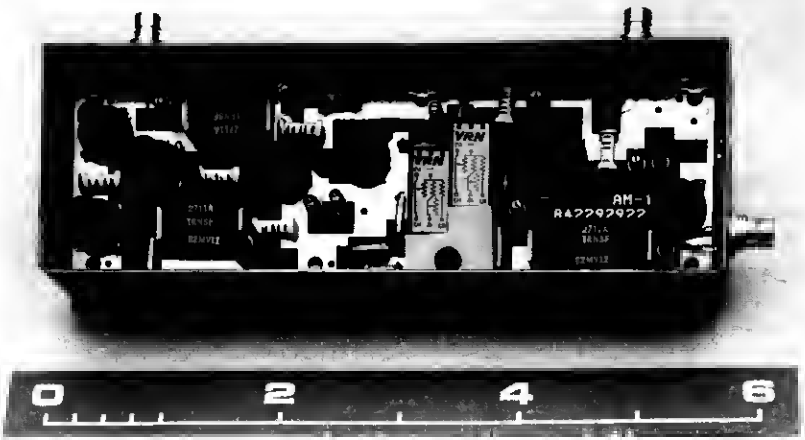

Fig. 3—Photograph of phase resolver.

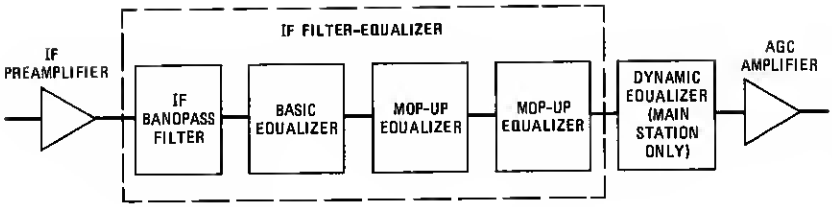

AGC – AUTOMATIC GAIN CONTROL

Fig. 4—IF filter-equalizer block diagram.

bridged-T sections are needed to compensate for amplitude variations caused by the finite Q of the filter inductors. The filter is assembled on a printed wiring board that is attached to a cast-aluminum housing as shown in Fig. 5. Electrostatic shields are contained within the housing. Field tests have confirmed that the filter meets system requirements.

Four mop-up equalizer designs achieve positive-slope, negative-slope, positive-quadratic-shape, and negative-quadratic-shape amplitude response. Bridged-T sections are used to realize each of the required shapes. Frequency response measurements of the AR6A switch section involved are used to choose the shapes used. When a mop-up equalizer is not needed, a 3.5-dB pad is used.

IV. LOWER AND UPPER IF BANDPASS FILTERS

4.1 Function

The transmitting-output and the receiving-input spectrum of the MMGT-R each cover the 59.844- to 88.460-MHz band and contain ten mastergroups. This frequency spectrum is split into two bands of five mastergroups each. The Lower-band Intermediate Frequency (LIF) is from 59.844 to 73.116 MHz, and the Upper-band Intermediate Frequency (UIF) is from 75.188 to 88.460 MHz.

Two bandpass filters (BPFs), the LIF and the UIF filters, are used in the MMGT-R to select each of these bands in the modulator and in the demodulator. The filters reject the carrier frequency, the upper sideband, and second and third harmonics of the carrier. Lower sideband loss keeps crosstalk and tone interference into adjacent radio channels, due to undesired modulator products, at acceptable levels.

4.2 Design

The designs of the two filters are similar, so only the LIF BPF will be covered. The stopbands cover a wide frequency range and very high losses are required. To achieve reasonable element values, to reduce the effect of parasitics for this wideband, and to ease tuning, a low-pass filter and a high-pass filter in tandem are used rather than a

Fig. 5—Photograph of IF filter.

bandpass design. Computer-aided insertion loss methods (Section 3.2) were used to synthesize a 13tb-order Cauer elliptic high-pass filter and a ninth-order equal ripple passband witb arbitrary stopband low-pass filter. Norton and pi-delta transformations were applied to achieve equal termination resistances and desirable element values. Two hridged-T constant resistance sections are required to compensate for amplitude variations in the passhand caused by the finite Q of the inductors.

The filter is assembled on two printed wiring boards and housed in a drawn steel enclosure (see Fig. 6). One board contains tbe equalizer, pad, and high-pass sections; the other board contains the low-pass section. Each filter inductor is shielded, and tbere is a shield between the printed wiring boards to reduce magnetic coupling hetween inductors.

V. MULTIMASTERGROUP CONNECTOR FILTERS

5.1 Function

The AR6A multimastergroup (MMG) connector is a precision passive network which allows a direct connection from the MMGT-R receiver to the MMGT-R transmitter when separation of the various components of the MMG signal is not required for routing or otber purposes. In this application, the type-B Mastergroup Translators (MGTB) and other multiplexing equipment are not required. The key elements of the MMG connector are a highly selective bandpass filter and a crystal hand-elimination filter. Figure 7 is a photograph of the two filters. The handpass filter selects the 8.628- to 21.9-MHz MMG

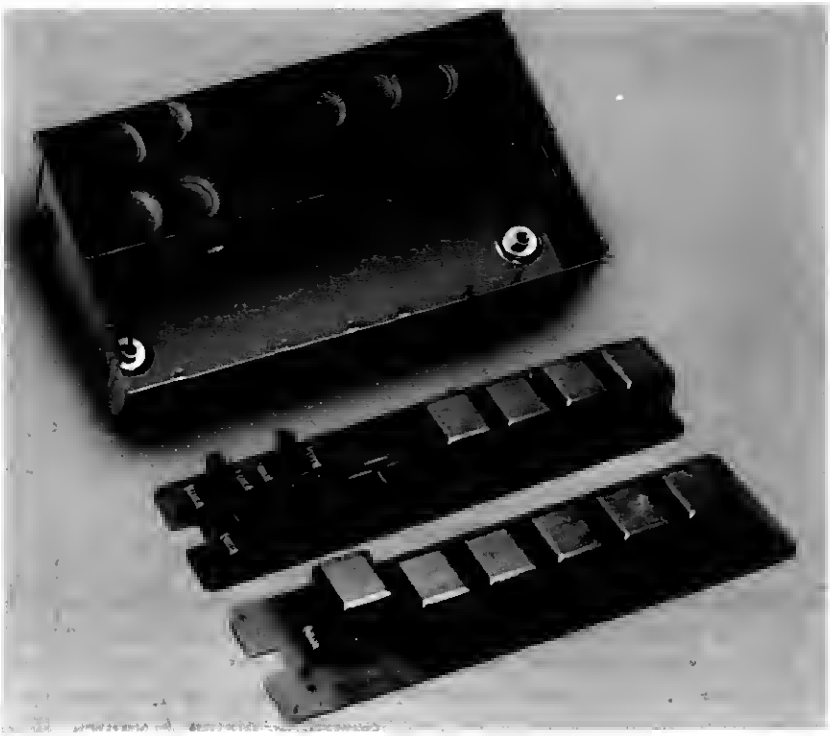

Fig. 6—Photograph of LIF BPF.

spectrum and rejects other frequencies to avoid crosstalk between radio channels. It also suppresses two pilot tones. The Band-Elimination Filter (BEF) suppresses four additional pilot tones.

The filters must have minimum effect on the message spectrum in spite of the high selectivity required. Wide skirts on the pilot suppression characteristic are needed to reduce noise near the pilots. The skirts increase the complexity of the crystal BEF significantly.

5.2 Design

The electrical design of the bandpass filter was achieved with the help of two interactive computer programs (Section 3.2). The inductor values were chosen to match a family of precision high-Q adjustable inductors originally designed for MGTB.[5] A complex arm bridged-T equalizer section was added to compensate for loss variations due to finite Q effects. The result is a 22nd-order loss-equalized bandpass filter. It was also possible to suppress two of the pilots by placing six crystal units at each frequency in shunt arms of tbe filter.

Four filters in tandem are used to suppress the remaining four pilots. For each frequency, a low-pass filter is designed to pass the desired

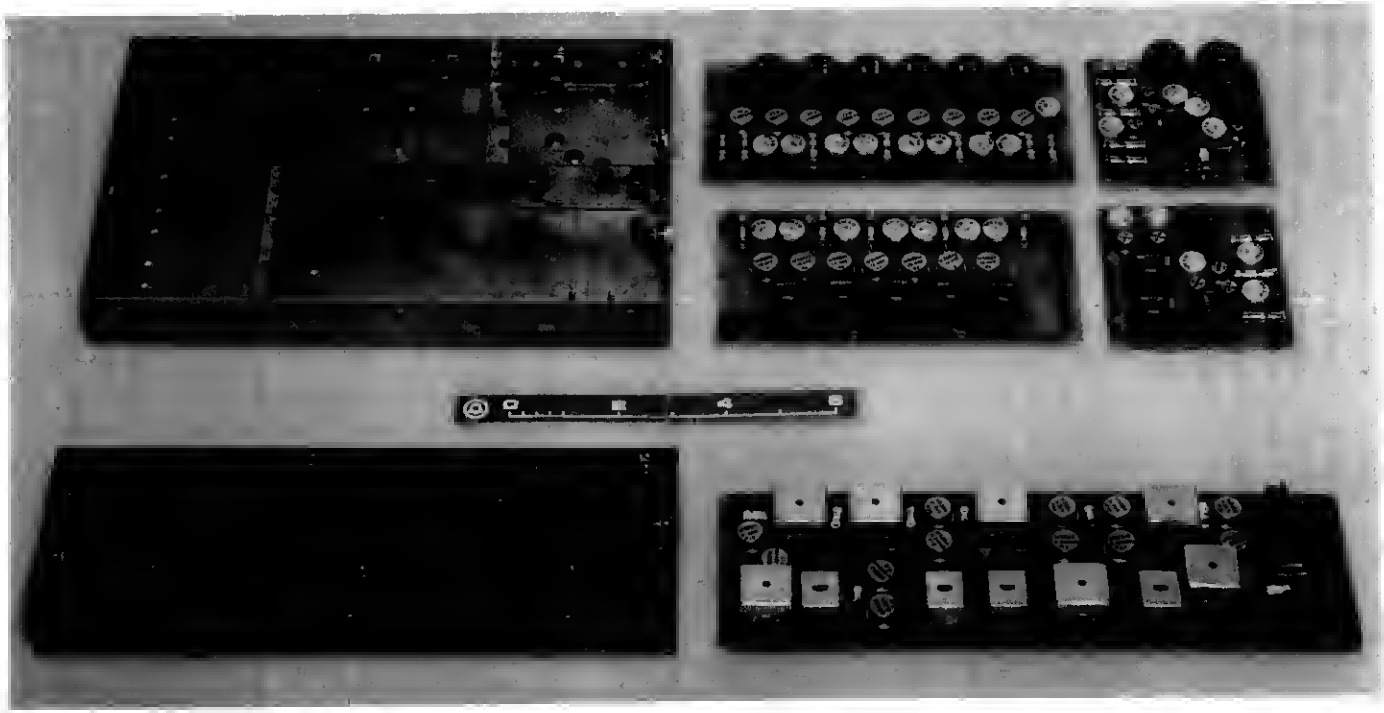

Fig. 7—Photograph of MMG connector filters with bandpass filter at top and crysal band-elimination filter at bottom.

spectrum, and crystal units are placed in shunt arms to reject the pilot. Because of the number of crystal units required to achieve the desired suppression characteristic, separate low-pass filters are needed for each frequency. A total of 28 crystal units are used in the band-elimination filter in addition to the 12 crystal units in the bandpass filter.

VI. SUMMARY

The paper has described the design of some of the key filters, equalizers, and networks for AR6A. The authors would like to thank S. Darlington for his innovative Cauer coupler designs, and F. J. Witt, T. H. Simmonds, R. P. Snicer, and J. L. Garrison for their inspiration and guidance.

REFERENCES

1. E. J. Drazy, R. C. MacLean, and R. E. Sheehey, "TD-3 Microwave Radio Relay System: Networks," B.S.T.J., *47*, No. 7 (September 1968), pp. 1397–422.
2. E. J. Drazy, R. E. Sheehey, and H. C. Wang, "TH-3 Microwave Radio System: Networks," B.S.T.J., *50*, No. 7 (September 1971), pp. 2137–54.
3. J. L. Garrison, L. P. Labbe, and C. C. Rock, "L-4 System: Basic and Regulating Repeaters," B.S.T.J., *48*, No. 4 (April 1969), pp. 841–88.
4. W. G. Albert, J. B. Evans, Jr., T. J. Haley, T. B. Merrick, and T. H. Simmonds, Jr., "L-4 System: Terminal Arrangements," B.S.T.J., *48*, No. 4 (April 1969), pp. 993–1040.
5. J. L. Garrison, A. Olsen, Jr., and T. H. Simmonds, Jr., "L5 Coaxial-Carrier Transmission System: Transmission Networks and Magnetic Components," B.S.T.J., *53*, No. 10 (December 1974), pp. 2203–48.
6. R. P. Hecken, R. C. Heidt, and D. E. Sandford, "The AR6A Single-Sideband Microwave Radio System: Predistortion for the Traveling-Wave-Tube Amplifier," B.S.T.J., this issue.
7. W. Cauer, *Synthesis of Linear Communication Networks*, Vol. 1, New York: McGraw-Hill, 1958, Chapter 9.
8. R. M.-M. Chen, C. F. Hempstead, Y. L. Kuo, M. L. Liou, R. P. Snicer, and E. D. Walsh, "L5 Coaxial-Carrier Transmission System: Role of Computing and Precision Measurements," B.S.T.J., *53*, No. 10 (December 1974), pp. 2249–68.

AUTHORS

Robert L. Adams, BSEE, 1967, Purdue University; MSEE, 1969, Massachusetts Institute of Technology; Bell Laboratories, 1967—. Mr. Adams bas been involved with the reduced sensitivity active filter design and computer-assisted inductor-capacitor (LC) filter tuning. In 1975 be became Supervisor of a group that designed thin-film Resistor Capacitor RC active filters, passive LC filters, and crystal filters. Presently, he is Supervisor of a group concerned with adaptive systems, switched-capacitor networks, and telecommunications applications of Very Large-Scale Integration (VLSI) silicon integrated circuits.

James L. Donoghue, Bell Laboratories, 1956—. Mr. Donoghue has been involved in the design and development of transmission networks for various projects for telepbone operating companies including A5 channel banks and LMX3 and L5E coaxial system.

Andrew N. Georgiades, Bell Laboratories, 1958—. Mr. Georgiades spent

most of his career designing communication networks for such projects as the K and O carrier systems, the L3, L4, and L5 coaxial systems, *Picturephone*,* DMG and MGT projects. Lately he participated in the design and development of a digital channel-hank controller simulator. He is presently a member of the technical staff in the Subsystems Analysis and Design Group engaged in the realization of a digital echo canceller. He has written extensively on the use of crystal networks, and he is a coholder of a patent for inventing the monolithic hand-elimination filter.

Robert E. Sheehey, Assoc. EE, 1960, Wentworth Institute, Boston, MA; Bell Lahoratories, 1960—. Mr. Sheehey has worked in the development of electrical networks for radio relay and coaxial carrier systems, in addition to the realization of analog networks for data transmission using hyhrid integrated-circuits technology. His present responsibilities include the development of adaptive notch equalizers for use in digital radio systems.

J. Robert Sundquist, Wentworth Institute, Boston, MA, 1951; Raytheon Company, 1951–1957; Bell Lahoratories, 1957—. Mr. Sundquist has been engaged in the design and development of a variety of inductors and transformers. He is presently concerned with the design and development of filters and various other networks for transmission systems.

Charles F. Walker, ASEE, 1967, Franklin Institute; BET, 1971, Northeastern University; Bell Lahoratories, 1967—. Mr. Walker has worked on the development of analog filters for data sets, digital terminals, and radio relay systems. His present responsihilities include the design of circuits for digital channel banks using hyhrid integrated circuit technology.

* Registered service mark of AT&T.